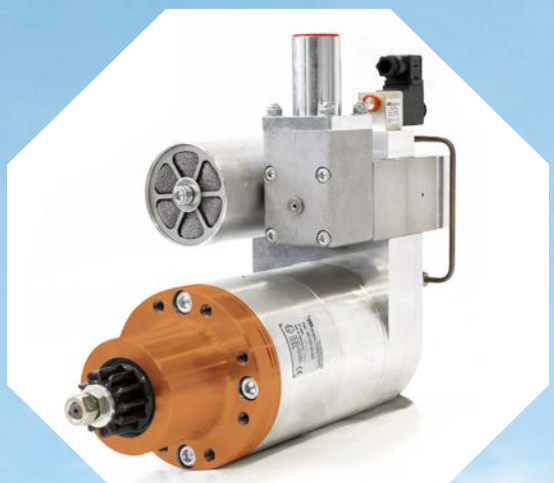

Galí Air & Hydraulic Explosion Proof Starters

for Hazardous Areas (ATEX)

Gali

Gali supplies explosion-proof engine starters that ensure safe engine starting even in hazardous environments.

We have the expertise to provide complete starting solutions for diesel and gas engines; we also offer explosion proof protection for industrial vehicles in compliance with European ATEX regulations. Our extensive knowledge of both markets and products has enabled us to develop the best technical ATEX starters available on the market.

Advantages

- ✓ Both our air and hydraulic starters are pre-engaged starters.
- ✓ The solenoid valves used for air starters are explosion proof and ATEX certified.
- ✓ We install non-sparking pinions made of special stainless steel to eliminate potential sparks.

The advantage of our stainless steel pinion versus the conventional beryllium copper pinions used by other manufacturers:

"Longer component life and no production of toxic dust"

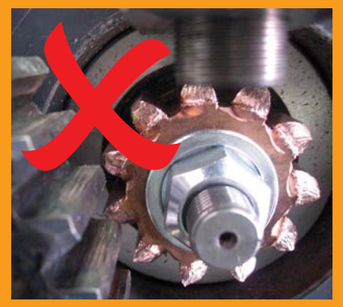

Certification and Testing

All of our starters are certified according the ATEX 94/9/EC and IECex directives. We have in-house testing facilities to ensure top quality throughout all steps of our manufacturing process.

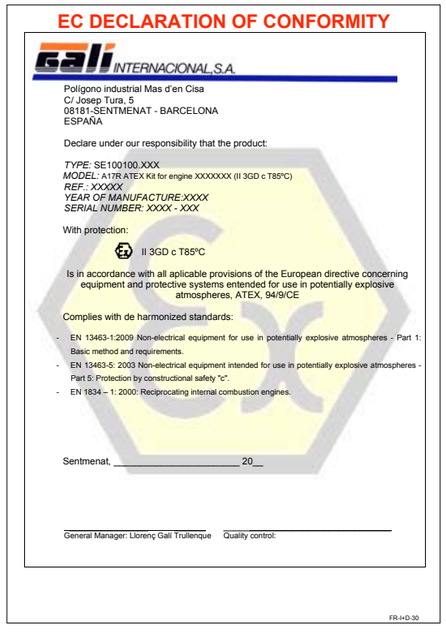

EC DECLARATION OF CONFORMITY

GALI INTERNACIONAL,S.A.

Polígono industrial Mas d'en Cisa
C/ Josep Tura, 5
08181-SENTMENAT - BARCELONA
ESPAÑA

Declare under our responsibility that the product:

TYPE: SE100100.XXX
MODEL: A17R ATEX Kit for engine XXXXXXX (II 3GD c T85ºC)
REF.: XXXXX
YEAR OF MANUFACTURE:XXXX
SERIAL NUMBER: XXXX - XXX

With protection:

II 3GD c T85ºC

Is in accordance with all aplicable provisions of the European directive concerning equipment and protective systems entended for use in potentially explosive atmospheres, ATEX, 94/9/CE

Complies with de harmonized standards:

- EN 13463-1:2009 Non-electrical equipment for use in potentially explosive atmospheres - Part 1: Basic method and requirements.
- EN 13463-5: 2003 Non-electrical equipment intended for use in potentially explosive atmospheres - Part 5: Protection by constructional safety "c".
- EN 1834 – 1: 2000: Reciprocating internal combustion engines.

Sentmenat, _____ 20__

General Manager: Llorenç Galí Trullenque Quality control:

FR-I+D-30

Air starters: models, technical specifications & dimensions

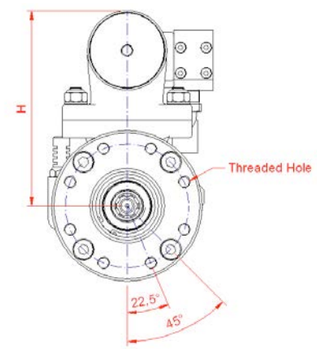

Model	Max. Working Pressure	Torque	Max. Speed	Engine Range	Net Weight
A17	30 bar	66 Nm	4000 rpm	up to 300 kW	6.6 kg
A27	40 bar	188 Nm	2800 rpm	up to 1100 kW	13 kg
S30	30 bar	305 Nm	2500 rpm	up to 3200 kW	21 kg
G300	40 bar	380 Nm	2500 rpm	up to 3200 kW	21 kg
S38	30 bar	360 Nm	2500 rpm	up to 3800 kW	21.5 kg
A47	30 bar	540 Nm	2300 rpm	up to 4400 kW	26 kg
A48	30 bar	640 Nm	2200 rpm	up to 7000 kW	34 kg

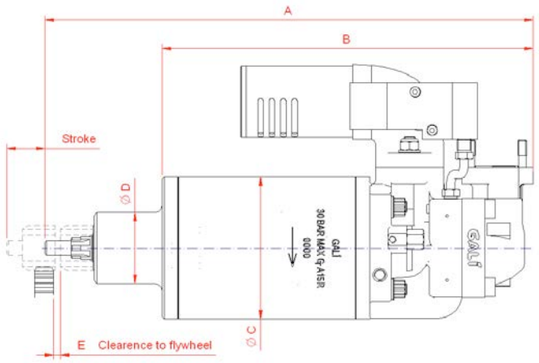

Model	A	B	ØC	ØD	E	H
A17	344	262	100	50	5	179
A27	415	310	125	70	5	167,5
S30	456	329	150	89 or 92	6	198
G300	524	404	150	89 or 92	6	-
S38	449	328	150	89 or 92	6	268
A47	540	399	178	92	6	255
A48	625	485	152	92	6	176

Hydraulic starters: models, technical specifications & dimensions

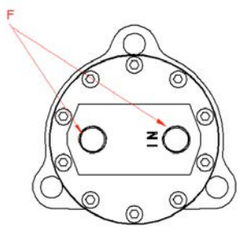

Model	Max. Working Pressure	Torque	Speed Range	Displacement	Net Weight
H5	207 bar	20 Nm	0 - 7000 rpm	up to 5 dm³	4.5 kg
H10	207 bar	61 Nm	0 - 7000 rpm	up to 8 dm³	7 kg
H15	207 bar	98 Nm	0 - 4500 rpm	up to 18 dm³	14 kg
H20	207 bar	163 Nm	0 - 4500 rpm	up to 41 dm³	18 kg
H25	207 bar	271 Nm	0 - 3000 rpm	up to 74 dm³	23.5 kg
H30	207 bar	365 Nm	0 - 3000 rpm	up to 110 dm³	27 kg

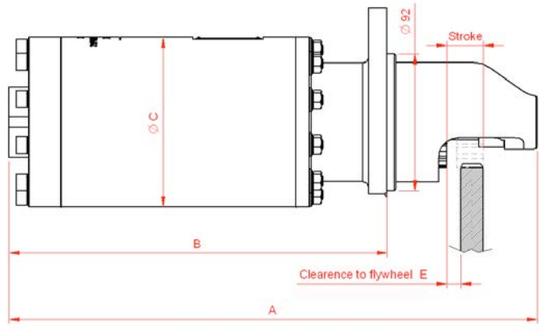

Model	A	B	ØC	E	F
H5	325	237	89	5,5	3/8" NPT
H10	330	242	102	5,5	3/8" NPT
H15	381,5	266,5	115	5	1/2" NPT
H20	400	284	130	5	1/2" NPT
H25	471	343	143	5	3/4" NPT
H30	480	352	150	5	3/4" NPT

Customized ATEX Hydraulic and Compressor Sets

We specialize in designing and manufacturing complete packages and provide our customers technical support to determine the equipment best suited for each application.

On request, we will also provide support in commissioning the equipment on site.

"For offshore and onshore installations with increased safety requirements."

Also available: ATEX Electric starter motors

GALI INTERNACIONAL, SA
C/ Josep Tura, 5
08181 Sentmenat
SPAIN
+34 93 715 31 11
spain@galigrup.com

GALI FRANCE, SA
Rue Barthélémy Thimonnier, 1
66200 Elne
FRANCE
+33 468 22 20 05
france@galigrup.com

GALI DEUTSCHLAND, GmbH
Am Ockenheimer Graben, 32
55411 Bingen
GERMANY
+49 672 11 00 26
germany@galigrup.com

GALI ITALIA, Srl
Via Dante snc
22070 Cirimido (CO)
ITALY
+39 031 46 12 24
italy@galigrup.com

GALI ZHENJIANG TRADING Co, Ltd
520 Can Sang Road,
Runzhou Industrial Park
212004 Zhenjiang
CHINA
+86 051185725611
china@galigrup.com

GALI JAPAN, GK
1F Saitama Kensetsu Kaikan
3-10-4
Takasago, Urawa-ku
330-0063 Saitama
JAPAN
+81 80 7498 4710
japan@galigrup.com

GALI SINGAPORE, Ltd
10 Anson Road, #31-10,
079903 International Plaza
SINGAPORE
+65 98180802
singapore@galigrup.com

Gali
Technical Solutions since 1951