Installations (Pipping & Instrumentation drawing hydraulic unit)

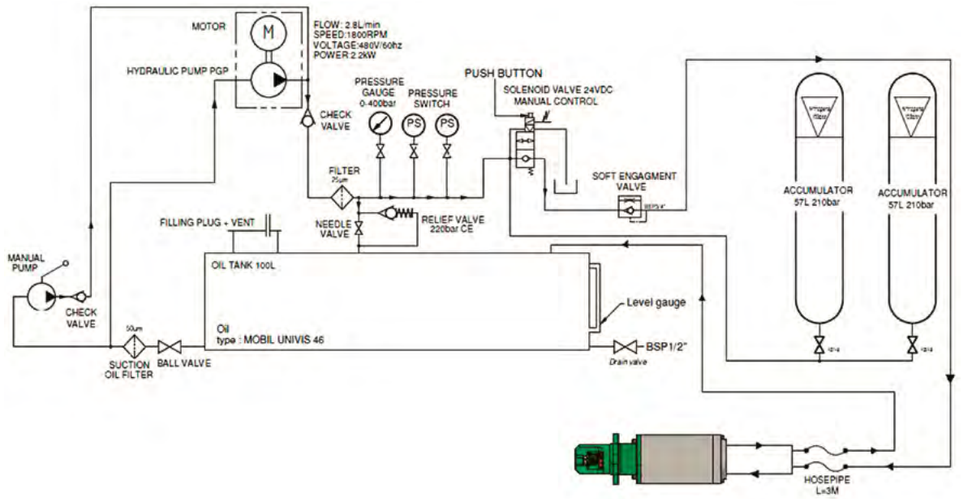

Customized Hydraulic Starting Systems

Hydraulic station with ATEX components.

All our Hydraulic Starter are available in ATEX version.

GALI INTERNACIONAL, SA
C/ Josep Tura, 5
08181 Sentmenat (Barcelona)
SPAIN
T +34 93 715 31 11
gali@galigrup.com

GALI FRANCE, SA
Rue Barthélémy Thimonnier, 1
66200 Elne
FRANCE
T +33 468 22 20 05
france@galigrup.com

GALI ITALIA, Srl
Via Dante snc
22070 Cirimido (CO)
ITALY
T +39 031 46 12 24
italy@galigrup.com

GALI SINGAPORE, Ltd
Nº 51 Tuas Avenue, 1
639501
SINGAPORE
M +65 98180802
singapore@galigrup.com

GALI DEUTSCHLAND, GmbH
Am Ockenheimer Graben, 32
55411 Bingen
GERMANY
T +49 672 11 00 26
deutschland@galigrup.com

GALI ZHENJIANG TRADING CO., Ltd
520 Can Sang Road,
Runzhou Industrial Park
212004 Zhenjiang
CHINA
T +86 051185725611
china@galigrup.com

GALI JAPAN, G.K.
3A 3F Ishii bldg 3-8-4
Sakaecho Kawaguchi city
Saitama 332-0017
JAPAN
M +81 80 7498 4710
japan@galigrup.com

Technical Solutions since 1951

www.galigrup.com

Hydraulic Starters

Applications

The Hydraulic Starters are mainly used to start diesel engines generally emergency sets for marine, oil and gas, off-shore, etc.

Advantages

Very reliable as an emergency starting system, because it is a closed and independent circuit with few mechanisms.

The hydraulic starting unit can be activated manually so it is a solution when there is no external energy available (black start).

It can be used under extreme environmental conditions just using the suitable hydraulic oil.

Unaffected when stopped for long periods of inactivity, even being under damp and hostile environmental, due to its closed ad sealed design that don't allow the entrance of dirt for it. The unit is always ready to start the engine.

Very low maintenance required.

Easy assembly on the engine by frontal flange.

How is the energy supplied to the starter?

The starter gets the power from the oil contained in the hydraulic unit.

This equipment includes a tank with oil and N_2 accumulator with the compressed gas and it may incorporate an electric pump or hand pump (manual), or both.

The hydraulic unit compresses the oil until 210 bar and this oil goes into the starter forcing the movement of the hydraulic motor.

We can adapt the whole system according customer technical specifications.

How it works

The oil goes into the starter and activate the hydraulic motor. The pistons start moving the disc and that transforms the linear movement into circular one which is transmit to the inertia friction clutch. Inertia friction clutch's pinion turns.

Hydraulic starter:
Hydraulic motor
+
Inertia friction clutch

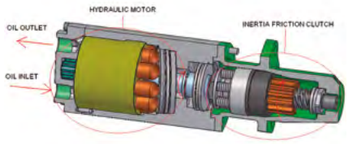

Dimensions

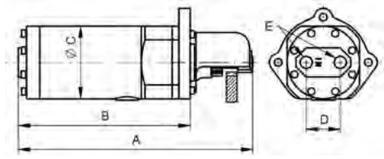

Model	Displacement	Maximum torque	Maximum speed	Engine displacement	A	B	C	D	E
H5	8,65 cm³/rev	20 Nm	7000 rpm	0 to 5 dm³	325	237	89	44	3/8" NPT
H10	21,95 cm³/rev	61 Nm	7000 rpm	5 to 8 dm³	330	242	102	48	3/8" NPT
H15	33,80 cm³/rev	98 Nm	4500 rpm	8 to 18 dm³	381,5	266,5	122	58	1/2" NPT
H20	57,26 cm³/rev	163 Nm	4500 rpm	18 to 41 dm³	400	284	130	62	1/2" NPT
H25	96,28 cm³/rev	271 Nm	3000 rpm	41 to 74 dm³	471	343	143	75	3/4" NPT
H30	131,88 cm³/rev	365 Nm	3000 rpm	74 to 110 dm³	480	352	150	81	3/4" NPT

GALI complete hydraulic engine starting system

We provide a full package to ensure to our customer the right solution for each different application, from offshore project in hazardous areas to auxiliary marine generator sets.

We provide installations drawings and make the technical calculation to assure the correct size and the correct number of accumulators needed for the oil consumption for each type of engine.

We design and manufacture our hydraulic starting systems following the demands of our customers: according required number of starts, cracking time, rule NFPTA, etc.

Manual hydraulic starting system

We supply them completely assembled with hoses and the suitable hydraulic starter.

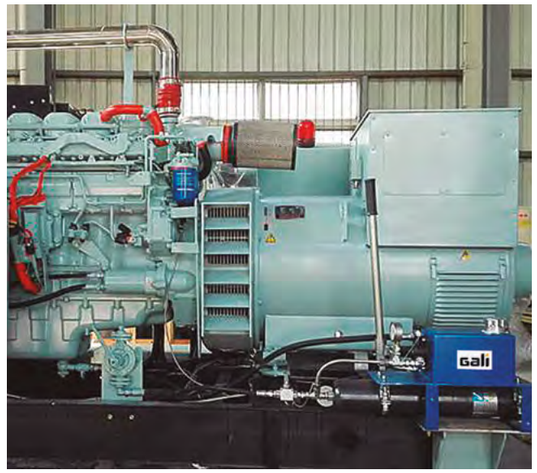

Electric Hydraulic Starting System

We supply them according to the customer request with many different options: see our request for quotation to check the different alternatives on our website.